KINO FLO®
LIGHTING SYSTEMS

LED-150 CONTROLLER FEET (4PK)
P/N: PRT-FET-L1

QTY.	PART	DESCRIPTION	PART NO.
4	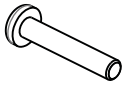	SCREW 4-40 X 11/16” PAN PHIL	2020172
4	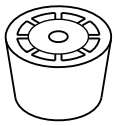	FEET 3/8” RUBBER BLK, ENCLOSURES	2230001
4	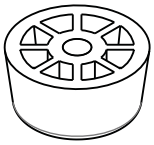	FEET 3/8”H X 3/4” DIA RUBBER BLK	2230002
4		SPACER .140” X 3/16” NY BLK	6120001

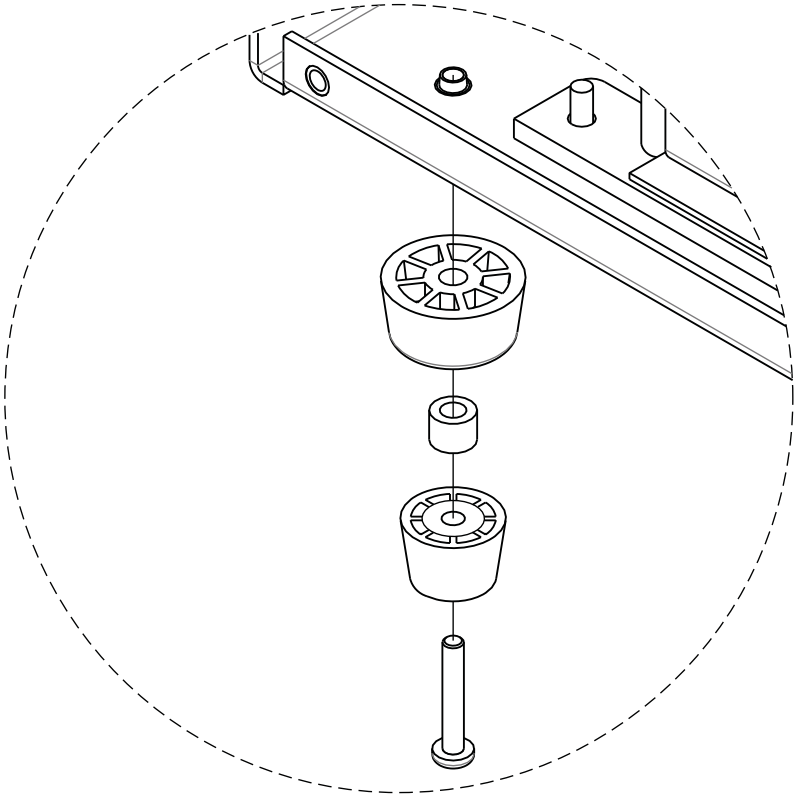

KINO FLO® 2840 N. Hollywood Way Burbank, CA 91505
Tel (818) 767-6528 Fax (818) 767-7517
www.kinoflo.com

Part No. 3120166
Rev. 2017-02-14