KINO FLO®
Lighting Systems

Fixture Wire Channel Repair (Silver)

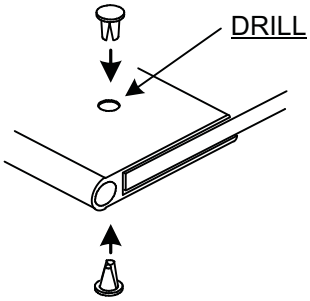

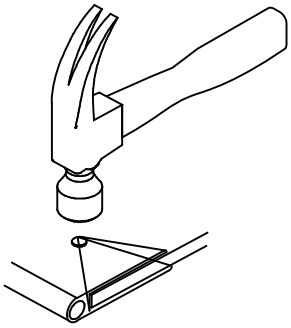

PRT-FIX-1S Single 15" (381 mm)

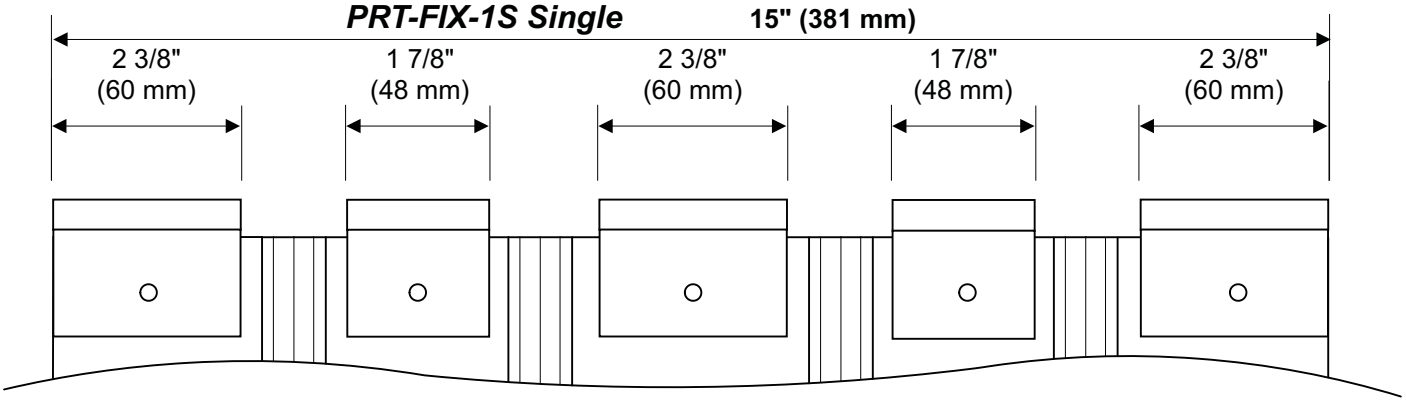

PRT-FIX-2S Double 24" (610 mm)

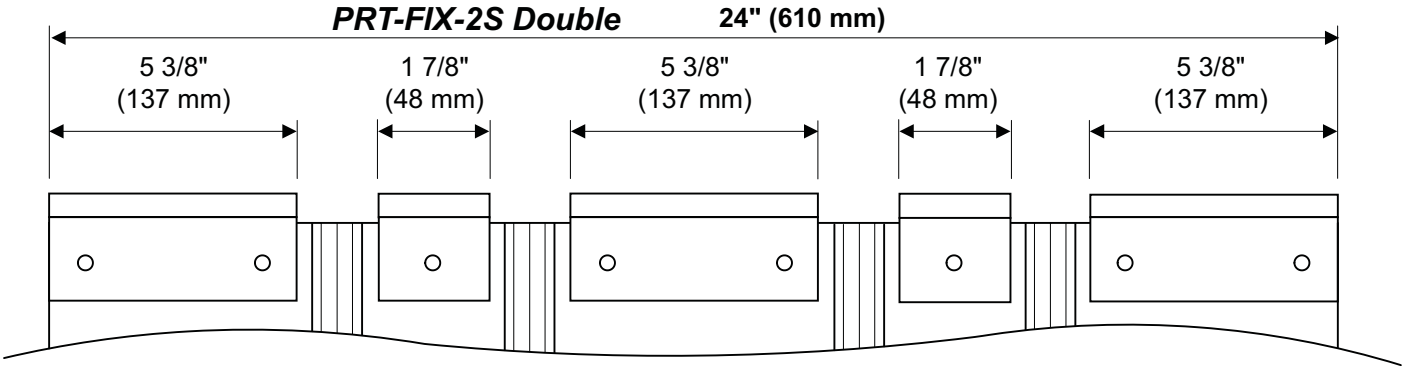

PRT-FIX-4S 4Bank, Select/Diva-Lite LED 20 30" (762 mm)

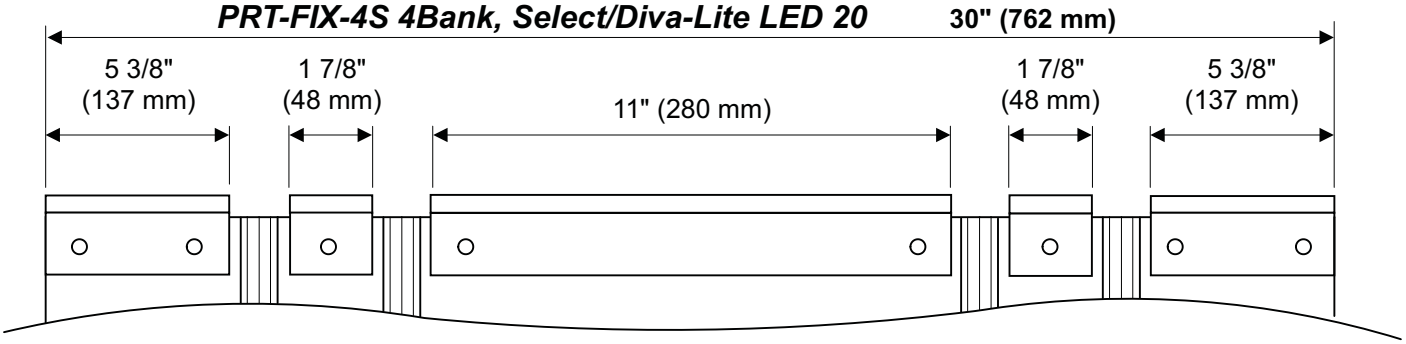

KINO FLO® 2840 N. Hollywood Way Burbank, CA 91505
Tel (818) 767-6528 Fax (818) 767-7517
www.kinoflo.com

Part No. 3120010
Rev. 02/21/17

KINO FLO®
Lighting Systems

Fixture Wire Channel Repair (Silver)

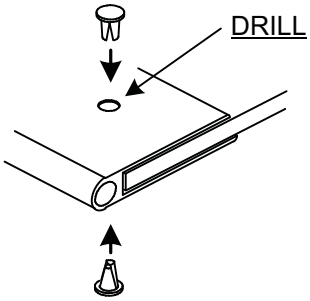

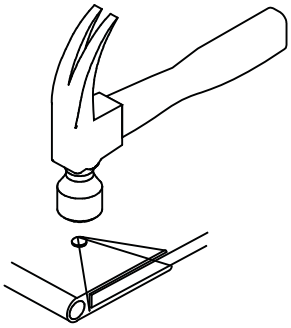

PRT-FIX-SL3 Select/Diva-Lite LED 30 **29" (737 mm)**

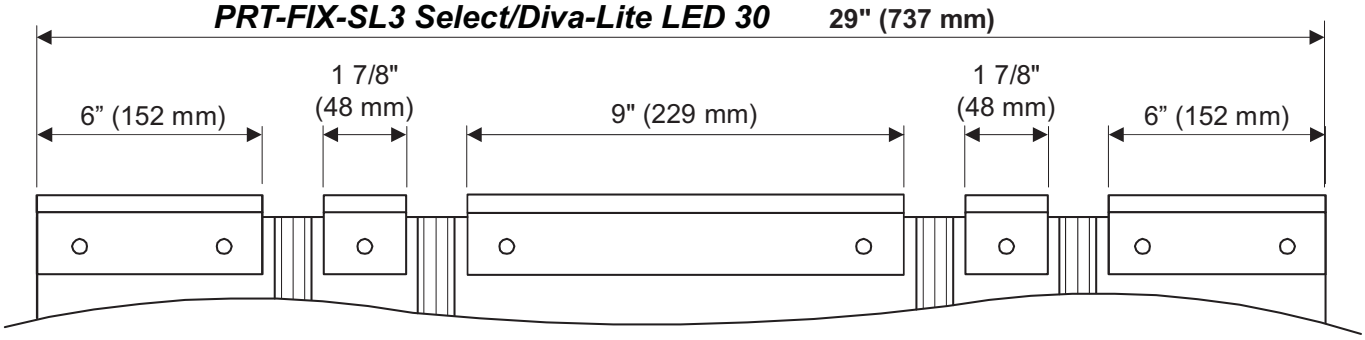

PRT-FIX-D2 Diva-Lite 201 **20.5 " (521 mm)**

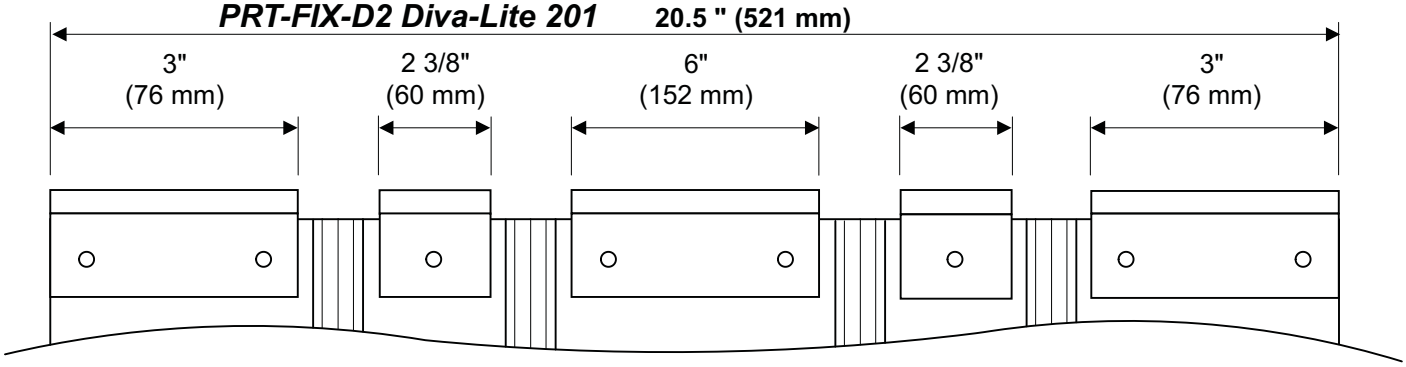

PRT-FIX-D4 Diva-Lite 415 **29" (737 mm)**

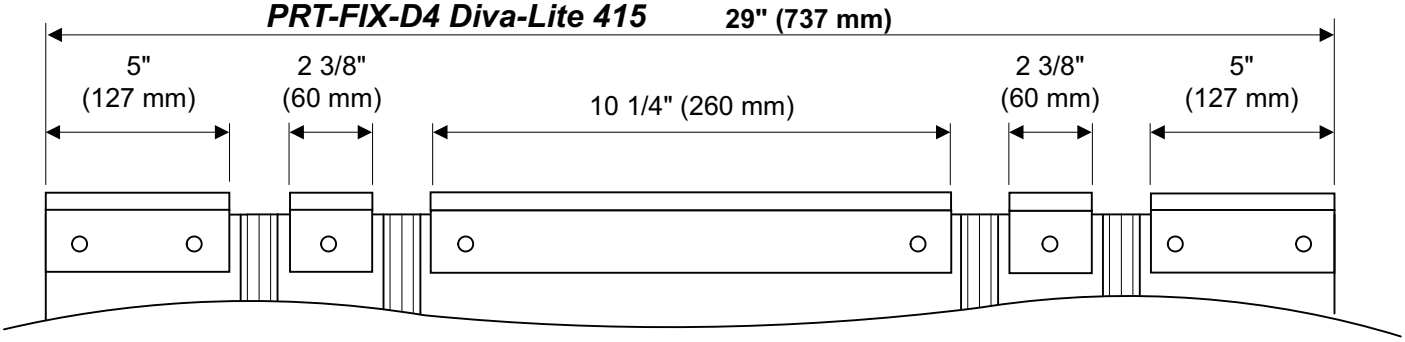

KINO FLO® 2840 N. Hollywood Way Burbank, CA 91505
Tel (818) 767-6528 Fax (818) 767-7517
www.kinoflo.com

Part No. 3120010
Rev. 02/21/17